K7GTP10FF

GAS SOLID TOP + GAS OVEN 2/1 GN

PRODUCT DESCRIPTION

Stainless steel frame. Double-skinned moulded oven door and heavy-duty handle. Athermic thermoset plastic knobs.
Thick cast iron cooking surface with rounded edges made in single casting. Lift-off central round insert.
Central stainless steel round burner, suitable for working at high temperatures.
Maximum temperature of about 500°C in the hottest central point, gently decreasing towards the edges thanks to different isothermal temperature zones.
Gas oven 2/1 GN. Oven stainless steel removable grill. Oven floor made of made of a thick steel sheet strengthened by a series of ribs.
Insulation of the cooking chamber and of the oven door ensured by a layer of high temperature resistant ceramic fibre.
Quick temperature rise and heat retention obtained through a stabilized flame burner with high performance integrated diffuser, suitable to work at high temperatures.
The oven burner is equipped with a thermostatic gas valve which allows to adjust the temperature up to 300°C. Safety ensured by a thermocouple kept active by the burner flame.
Height-adjustable stainless steel legs.
Tested with natural gas or LPG, according to the user's needs.
Accessories available **on demand**.

Viale del Progresso, 20 Z.I. 35026 Conselve (PD) - Italia
P.I. e C.F IT01897630289 | TEL: (+39) 049 95 00 555 | FAX: (+39) 049 95 00 560

TECHNICAL SPECIFICATIONS

Width: 800 mm
Depth: 700 mm
Height: 850 mm
Weight: 169 kg
Volume: 0.80 m³
Electrical power: 19.05 kW

Viale del Progresso, 20 Z.I. 35026 Conselve (PD) - Italia
P.I. e C.F IT01897630289 | TEL: (+39) 049 95 00 555 | FAX: (+39) 049 95 00 560

K7GTP10FF

TUTTAPIASTRA A GAS + FORNO A GAS 2/1 GN - PLAQUE COUP DE FEU À GAZ + FOUR À GAZ 2/1 GN - GAS SOLID TOP + GAS OVEN 2/1 GN - GAS-GLÜHPLATTENHERD + GASBACKOFEN 2/1 GN - COCINA DE PLACA RADIANTE A GAS + HORNO A GAS 2/1 GN - ГАЗОВАЯ КЕРАММИЕСКАЯ НЛМТА + RAЗОВАЯ ДУХОВКА 2/1 GN

DATI TECNICI / CARACTERISTIQUES TECHNIQUES / TECHNICAL SPECIFICATIONS / TECHNISCHE DATEN / CARACTERISTICAS TECNICAS / ТЕХНИЧЕСКИЕ ХАРАКТЕРИСТИКИ

Dimensioni / Dimensions / Dimensions / Maße / Medidas / Размеры	**[мм]**	**800x700x850**
Gas / Gaz /Gas / Gas / Газ (**B**)	**[Kw] - [кВт]**	**19**
Tipo / Type / Type / Тур / Тип (**A**)		**A1**
GPL/LPG / Сжиженный нефтяной газ (G30) (**D**)	**[Kg/h] [кг/ч]**	**1,502**
Metano / Methane / Natural gas / Erdgas / Метан (G20) (**C**)	**[m3/h] [м3/ч]**	**2,015**
Aria / Air / Luft / Aire / Воздух	**[m3/h] [м3/ч]**	**38**
Racc. Gas / Racc. Gaz / Gas fitting / Gasanschluss / Empalme gas / Газовое соединение		**UNI-ISO 7/1 R ½**
Bruciatore / Bruleur / Burner / Brenner/Quemador / Горелка	**[kW] [кВт]**	**1 x 11,5**
Forno / Four / Oven / Ofen / Horno / Духовка 2/1 GN (G)	**[kW] [кВт]**	**1 x 7,5**

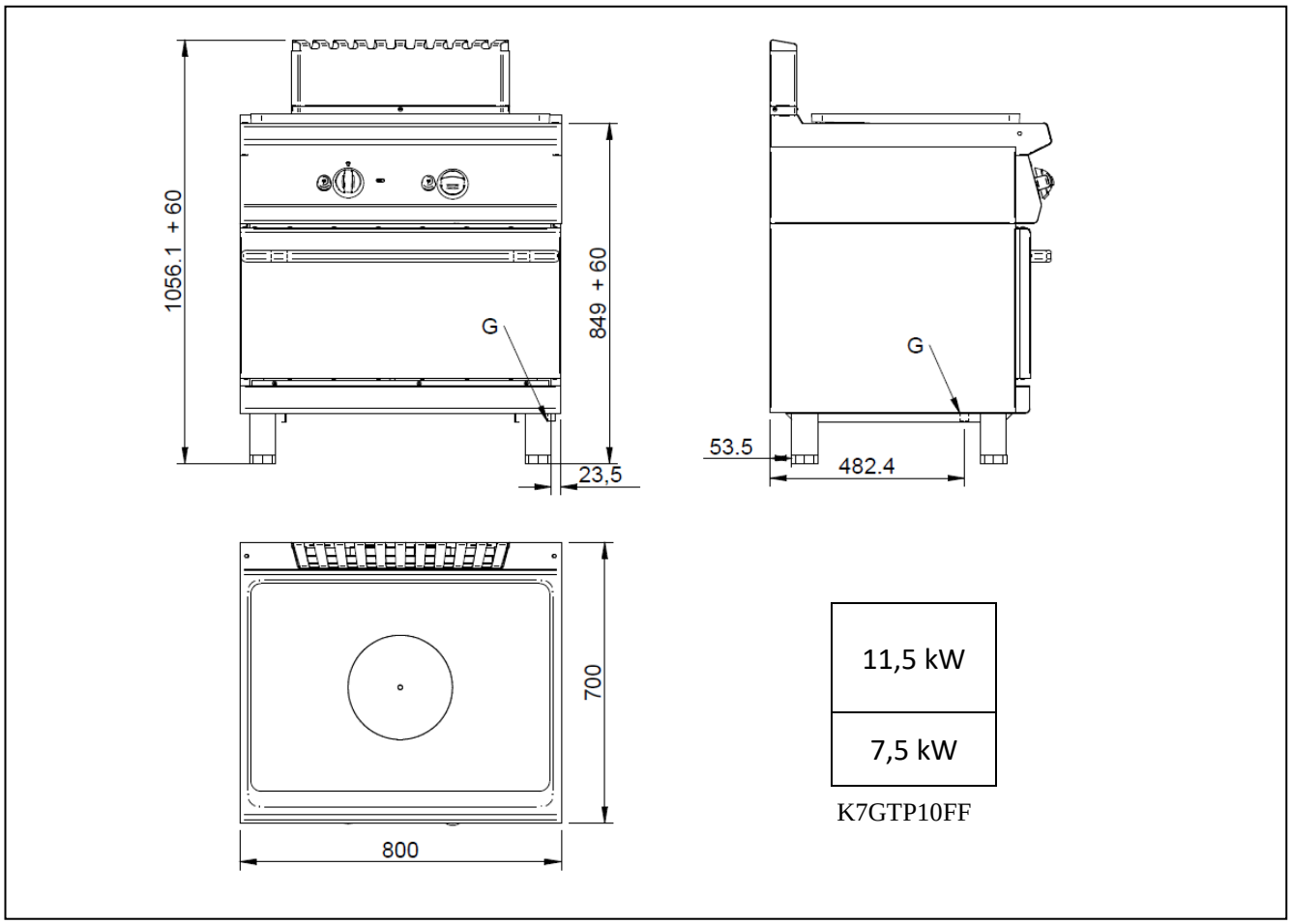

G = Gas / Gaz / Gas / Gas / Gas / газ

Optional

n.1 x **K7A25019** Applicazione suola in ghisa - Sole en fonte - Built-in cast iron bottom - Sohle aus Gusseisen - Opción base en fierro fundido -Дополнение подложка из чугуна для плиты